Midea

EN

WASHING MACHINE

Front Loading

USER MANUAL

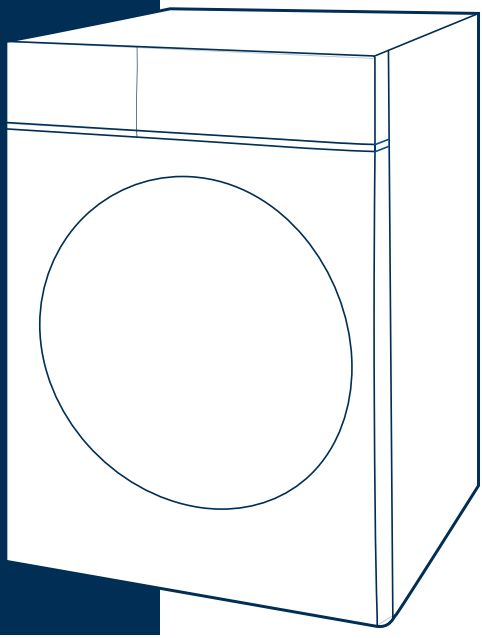

Read This Manual
Read all instructions and explanations for the installation before use. Follow the instructions carefully. Keep the operation instructions handy for later use. If the appliance is sold or passed on, ensure that the new owner always receives this operation instructions.

MODEL:
MF200W100WB Series
MF200W120WB Series

www.midea.com

Congratulations to your new machine !

This user manual will help you discover all the benefits of your machine and use it the way you want.

We strongly recommend that you read this manual carefully before using the washing machine for the first time.It contains important safety instructions and information relating to the installation, operation and maintenance.Proper handling contributes to efficient, environmentally friendly and safe use and minimises energy consumption during operation. Please always keep the proof of purchase to preserve any warranty claims.

This manual includes instructions for setting up your SmartHome App "MSmartHome" as well.

These instructions for use are in general terms. This means: Certain functions apply to your machine, while others do not. We are continuously working on the further development and improvement of our unit types and models. Therefore, we reserve the right to make changes to the design, features and accessories of all types and models without prior notice.

On our website **www.midea.com** you can also download the user manual in digital form and discover other products. We hope you enjoy using your machine.

Explanation of symbols

Danger
This symbol indicates that there are dangers to the life and health of persons due to extremely fammable gas.

Warning of electrical voltage
This symbol indicates that there is a danger to life and health of persons due to voltage.

Warning
The signal word indicates a hazard with a medium level of risk which, if not avoided, may result in death or serious injury.

Caution
The signal word indicates a hazard with a low degree of risk which, if not avoided, may result in minor or moderate injury.

Notice
The signal word indicates important information (e.g. damage to property), but not danger.

Observe instructions
Notes with this symbol indicate that you should read the operating instructions carefully.

Observe instructions
This symbol indicates that a service technician should only operate and maintain this appliance in accordance with the operating instructions.

CONTENTS

1 SAFETY INSTRUCTIONS 3

1.1 Safety Instructions 3

2 INSTALLATION 11

2.1 Product Description 11

Accessories 11

2.2 Installation 12

Installation area 12

Unpacking the machine..... 13

Remove transport bolts 13

Levelling the machine..... 14

Connect the water supply hose 14

Drain Hose 14

Acoustic Sponge 15

3 OPERATION 16

3.1 Quick Start 16

3.2 Before Each Washing 18

3.3 Detergent Dispenser 19

3.4 Control Panel 20

3.5 Display 21

3.6 Programmes..... 22

3.7 Option..... 25

4 MAINTENANCE 29

4.1 Cleaning and Care 29

Cleaning the Cabinet..... 29

Cleaning the Drum 29

Cleaning the Door Seal and Glass.. 29

Cleaning the Inlet Filter 30

Cleaning the Detergent Dispenser.. 31

Cleaning the Drain Pump Filter..... 32

Emergency Door Release..... 33

4.2 Trouble Shooting..... 34

4.3 Customer service..... 35

5 TECHNICAL SPECIFICATION 36

6 SMART FUNCTION 37

1 SAFETY INSTRUCTIONS

INTENDED USE

The product is intended only for home use and for textiles in household amounts suitable for washing. This appliance is for indoor use only and not intended for built in use. Only use according to these instructions. The appliance is not intended for commercial use.
Any other use is considered as improper use. The producer is not responsible for any damage or injuries that may result of it.

- This appliance is intended to be used in household and similar applications such as:

- Staff kitchen areas in shops, offices and other working environments;
- Farm houses;
- By clients in hotels, motels and other residential type environments;
- Bed and breakfast type environments;
- Areas for communal use in blocks of flats or in launderettes.

■ 1.1 Safety Instructions

Please read the following safety information thoroughly and follow it strictly to minimize the risk of fire or explosion, electric shock and to prevent property damage, personal injury or loss of life. Failing to follow these instructions shall void any warranty.

⚠ Warning!

This combination of symbol and signal word indicates a potentially dangerous situation which may result in death or serious injuries unless it's avoided.

⚠ Caution!

This combination of symbol and signal word indicates a potentially dangerous situation which may result in slight or minor injuries or damage to property and the environment.

Note!

This combination of symbol and signal word indicates a potentially dangerous situation which may result in slight or minor injuries.

1 SAFETY INSTRUCTIONS

⚠ **Warning!**

ELECTRIC SHOCK HAZARD

- If the supply cord is damaged, it must be replaced by the manufacturer, its service agent or similarly qualified persons in order to avoid a hazard.
- If the machine is damaged, it must not be operated unless repaired by the manufacturer, its service agent or similarly qualified persons.
- Risk of electric shock!
- The appliance can be used by children aged from 8 years and above and persons with reduced physical,sensory or mental capabilities or lack of experience and knowledge if they have been given supervision or instruction concerning use of the appliance in a safe way and understand the hazards involved. Children shall not play with the appliance. Cleaning and user maintenance shall not be made by children without supervision.
- Children should be supervised that they do not play with the appliance.
- Children 3 years and under shall be kept away from the appliance or continuously supervised.
- Animals and children may climb into the machine. Check the machine before every operation.
- Do not climb or sit on the appliance.

INSTALLATION LOCATION AND SURROUNDING

- All washing and additional substances are to be kept in a safe place out of the reach of children.
- Do not install the machine on a carpet floor.
- The obstruction of the openings by a carpet can damage the machine.
- Keep the appliance clear from heating sources and direct sunlight to avoid plastic and rubber parts to corrode.
- Do not use the appliance in humid environments or rooms containing explosive or caustic gas. In case of water leakage or water splashes let the appliance dry in the open air.
- The appliance must not be installed behind a lockable door, a sliding door or a door with a hinge on the opposite side to that of the washing machine .
- Do not operate the machine in rooms with a temperature of below 5°C. This can cause damages to parts of it. If it is unavoidable, make sure to drain the water completely from the appliance after every use (see “Maintenance - Cleaning of drain pump filter”) to avoid damages caused by frost.
- Never use flammable sprays or substances in the immediate proximity of the appliance.

1 SAFETY INSTRUCTIONS

INSTALLATION

- Remove all packaging material and transport bolts before using the appliance. Otherwise, serious damage may result.
- This appliance is equipped with a single inlet valve and can be connected to the cold water supply only.
- Mains plug must be accessible after installation.
- Before washing clothes for the first time, the product shall be operated once throughout all the procedures without any clothes inside. Before using the washing machine, the product shall be calibrated.
- Do not put any excessively heavy objects on the appliance, like water containers or heating devices.
- The new hose-sets supplied with the appliance are to be used and that old hose-sets should not be reused.
- Max. Inlet water pressure 1 MPa. Min. inlet water pressure 0.05 MPa.

ELECTRICAL CONNECTION

- Make sure the supply cable is not trapped by the machine, it can get damaged.
- Connect the product to a grounded outlet protected by a fuse complying with the values in the “ Technical specifications” table. The grounding installation has to be made by a qualified electrician. Ensure that the machine is installed in accordance with the local

regulations.
- Water and electrical connections must be carried out by a qualified technician in accordance with the manufacturer's instructions and local safety regulations.

⚠ Warning!
- Don´t use multiple plugs or extension cords.
- The appliance must not have an external switching device such as a timer or connected to a circuit that is regularly switched on and off.
- Do not pull the plug out of the mains outlet if there is flammable gas around.
- Never pull out power plug with wet hands.
- Always pull at the plug, not at the cable.
- Always unplug the appliance if it is not being used.

WATER CONNECTIONS

- Check the connections of the water inlet tubes, the water tap and the outlet hose for possible problems due to changes of water pressure. If the connections loosen or leak, close the water tap and get it repaired.
- Do not use the appliance before the pipes and hoses are installed properly by qualified persons.
- Glass door may become very hot during the operation. Keep children and pets far away from the machine while it is operating.
  The water inlet and outlet hoses have to be safely installed and remain undamaged.
- Otherwise, water leakage can occur.

- Do not remove the drain pump filter while there is still water in the appliance. Big quantities of water can leak out, and there is a risk of scalding due to hot water.

OPERATION AND MAINTENANCE

- Never use any flammable, explosive or toxic solvents. Do not use gasoline and alcohol etc. as detergents. Only select detergents that are suitable for machine washing.
- Make sure that all pockets are emptied. Sharp and rigid items such as coins, brooches, nails, screws, stones etc. may cause serious damages to this machine.
- Remove all objects from pockets such as lighters and matches before use the appliance. Thoroughly rinse items that have been washed by hand.
- Items that have been soiled with substances such as cooking oil, acetone, alcohol, petrol, kerosene, spot removers, turpentine, wax and wax removers should be washed in hot with an extra amount of detergent before being dried in the appliance.
- Items containing foam rubber (latex foam), shower caps, water proof textiles, rubber backed articles and clothes or pillows fitted with foam rubber pads should not be washed in the machine.
- Fabric softeners or similar products should be used are recommended in their instructions. Never try to open the door forcefully.

- The door will unlock shortly after the end of a cycle.
- Please do not close the door with excessive force. If it is found difficult to close the door, please check if the clothes are properly inserted and distributed.
- Always unplug the appliance and close the
- water tap before cleaning and maintenance and after each use.
- Never pour water over the appliance for cleaning purpose. Risk of electric shock!
- Repairs shall only be carried out by the manufacturer, its service agent or similarly qualified persons in order to avoid a hazard.
- The producer will not be responsible for damages caused by the intervention of not authorized persons.

TRANSPORT

- Before Transport:
  - Bolts shall be reinstalled to the machine by a specialized person;
  - Accumulated water shall be drained out of the machine.
- This appliance is heavy. Transport with care.

Never hold any protruding part of the machine when lifting. The machine door can not be used as a handle.

1 SAFETY INSTRUCTIONS

ENVIRONMENT

Disposal of old appliances
(Only for EU countries)

This appliance is labelled in accordance with the European Directive 2012/19/EU on waste electrical and electronic equipment (WEEE). The directive provides the framework for the EU-wide take-back and recycling of waste equipment.

The devices marked with this symbol must not be disposed of in household waste!

As a manufacturer, we ensure environmentally friendly treatment and recycling of old appliances within the scope of product responsibility. Our products are registered with the authorities for electrical appliances and packaging. For further information on collection and disposal, please contact your local authority, city council or your (specialised) retailer. Already during the development of new appliances, we pay attention to a high recyclability of the materials used. High recycling rates are achieved via the take-back system to reduce the burden on waste dumps and the environment. Together, we are making an important contribution to environmental protection.

2 INSTALLATION

2.1 Product Description

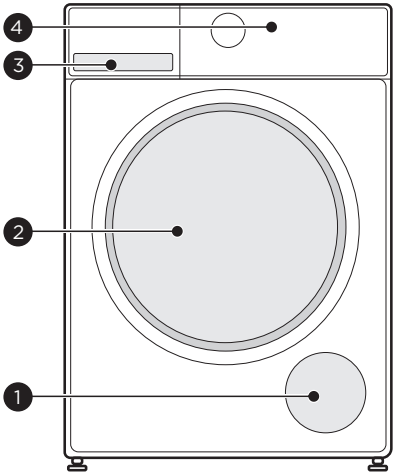

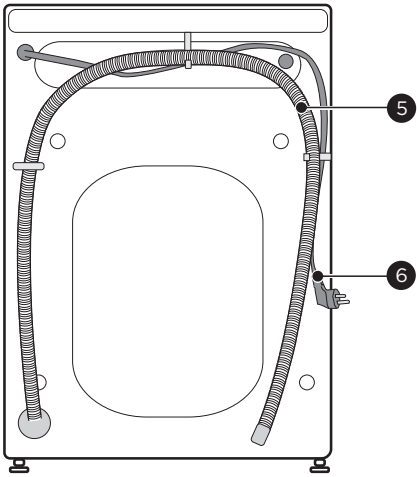

1	Service flap	4	Control panel
2	Door	5	Drain hose
3	Detergent dispenser	6	Power supply cord

Note!

- The product picture is for illustration only, please refer to real product as reference.

Accessories

4 x Cover caps	1 x Supply hose cold water	1 x Owner's manual	Acoustic sponge (optional)

2.2 Installation

Tools Needed If Installation By Yourself (not include)

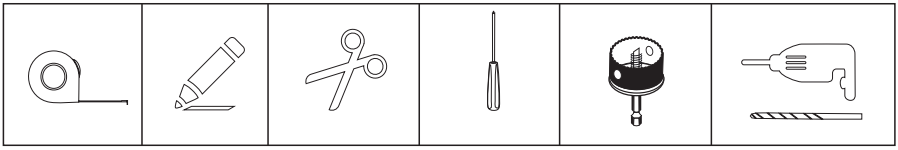

Installation area

Warning!

- Stability is important to prevent the product from wandering!
- Make sure the machine is standing leveled and stable.
- Make sure that the product does not stand onto the power cord.
- Make sure to maintain the minimum distances from the walls as shown in the picture.

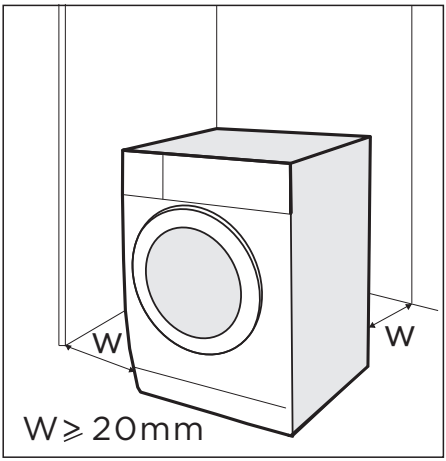

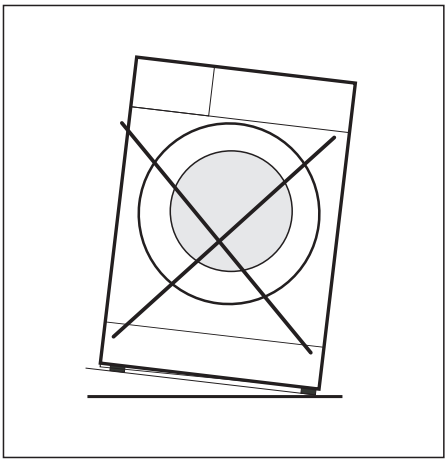

Before installing the machine, the location characterized as follows shall be selected:
1. Rigid, dry, and level surface.
2.Avoid direct sunlight.
3.Sufficient ventilation.
4.Room temperature is above 5°C.
5.Keep far away from the heat sources such as coal or gas burning appliances.

2 INSTALLATION

Unpacking the machine

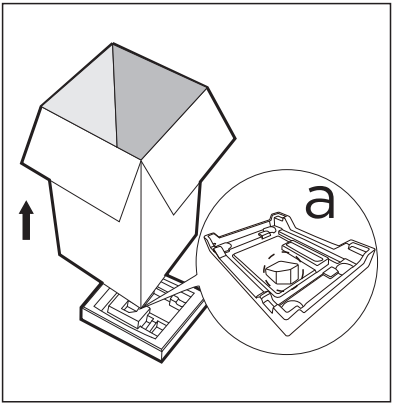

Warning!

- Packaging material (e.g. Films, Styrofoam) can be dangerous for children.
- There is a risk of suffocation ! Keep all packaging well away from children.

1. Remove the cardboard box and styrofoam packing.
2. Lift the washing machine and remove the base packaging. Make sure the small triangle foam (a) is removed with the bottom packaging together. If not, lay the unit down on the side surface and remove it manually.
3. Remove the tape securing the power supply cord and drain hose.
4. Remove the inlet hose from the drum.

Remove transport bolts

Warning!

- You must remove the transport bolts from the backside before using the product.

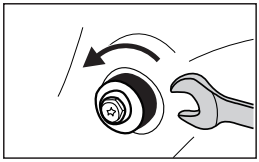

Loosen the 4 transport bolts with a spanner.

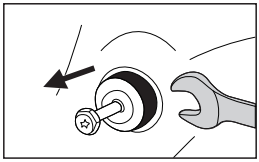

Remove the bolts including the rubber parts and keep them for future use.

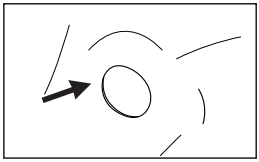

Close the holes using the cover caps.

2 INSTALLATION

Levelling the machine

Warning!

- The lock nuts on all four feet must be screwed tightly against the housing.

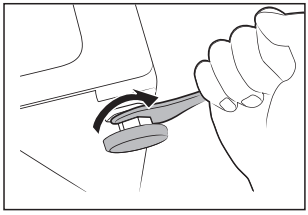

1. Loosen the lock nut.
2. Turn the foot until it reaches the floor.
3. Adjust the legs and lock the nuts with a spanner. Make sure the machine is level using a spirit level.

Connect the water supply hose

Warning!

To prevent leakage or water damage, follow the instructions in this chapter.

- Do not kink, crush or modify water inlet hose.

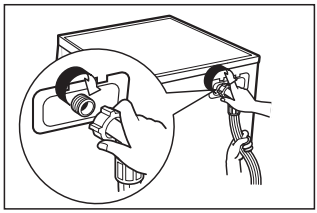

Connect the water supply hose to the water inlet valve and a water tap with cold water as indicated.

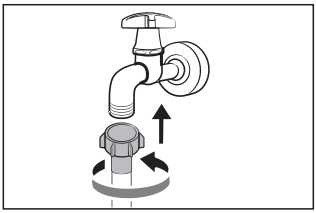

Note!

- Connect manually, do not use tools. Check if the connections are tight.

Drain Hose

Warning!

- Do not kink or protract the drain hose.
- Position drain hose properly ,otherwise damage might result of water leakage.
- It is not allowed to remove the buckle of drain pipe.

2 INSTALLATION

There are two ways to place the end of drain hose:

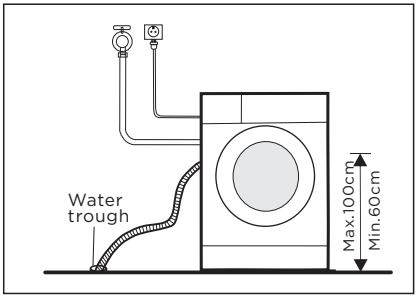

1.Put it into the water trough.

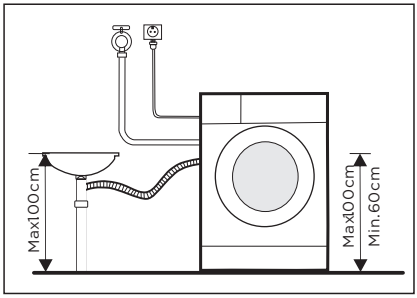

2.Connect it to the branch drain pipe of the trough.

Acoustic Sponge

Note!

- Please make sure to assemble the acoustic sponges, which can effectively reduce the noise caused by the machine while working, in order to provide you with a more peaceful and quiet living environment.

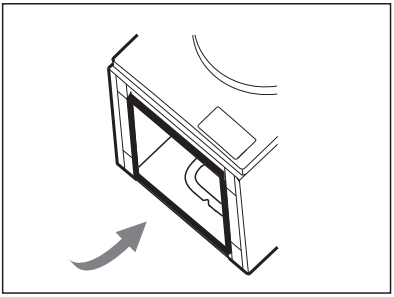

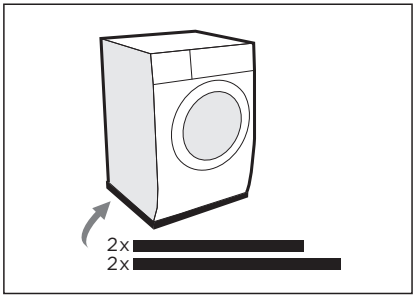

1. Get the machine laid on the floor, using some soft material like foam or clothes between the machine and floor for a protection.
2. Stick the 2x longer sponges to the longer bottom edges of machine, and the 2x shorter sponges to the shorter bottom edges.

3 OPERATION

3.1 Quick Start

Caution!

- Before washing, please make sure the washing machine is installed properly.
- Your appliance was thoroughly checked before it left the factory. To remove any residual water and to neutralize potential odors, it's recommended to clean your appliance before first use. For this reason, start the Cotton program at 90°C without laundry and detergent.

1. Before Washing

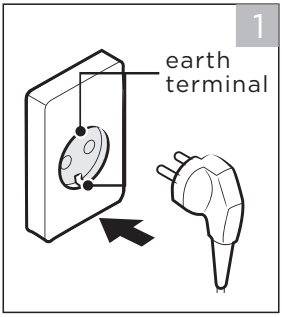

Plug in

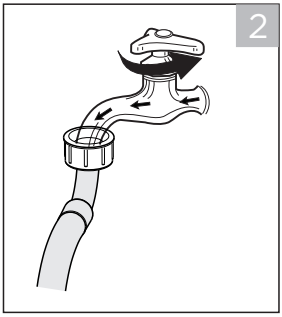

Open tap

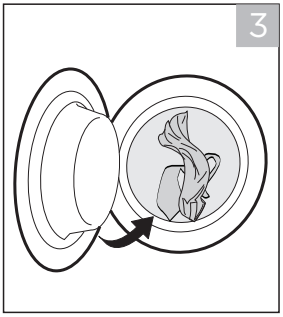

Load

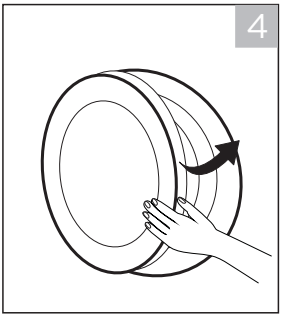

Close door

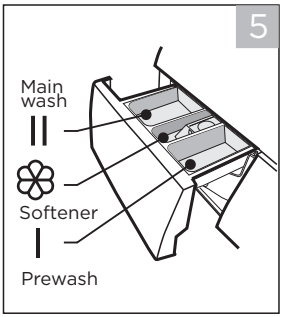

Add detergent

Note!

- Detergent need to be added in compartment I if the pre-wash function is selected.
- Do not put laundry beads into the detergent dispenser.

2. Washing

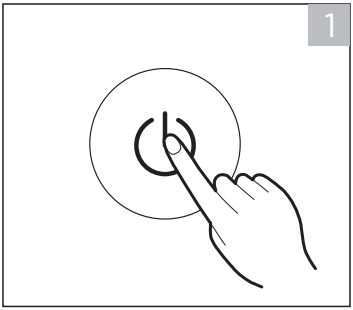

Power on

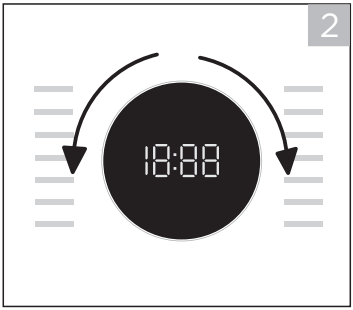

Select programme

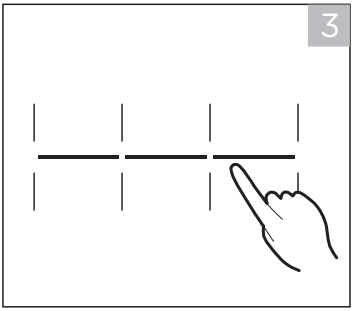

Select function or remain default settings

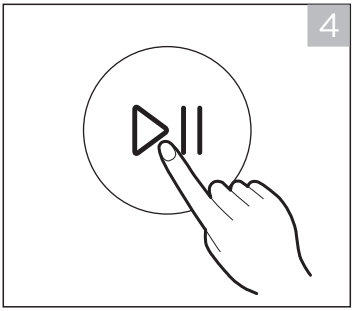

Press Start/Pause to start the program

3. After Washing

Buzzer beep and “End” on display.

3.2 Before Each Washing

- The ambient temperature of the machine should be 5°C-40°C. If used under 0°C, the inlet valve and draining system may be damaged. If the machine is installed under freezing conditions, it should be transferred to normal ambient temperature to ensure the water supply hose and drain hose can unfreeze before use.
- Please check your laundry care labels and the detergent use instructions before wash. Use non-foaming or less-foaming detergent suitable for washing machine properly.

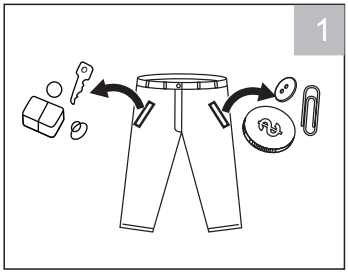

Take all items out of the pockets

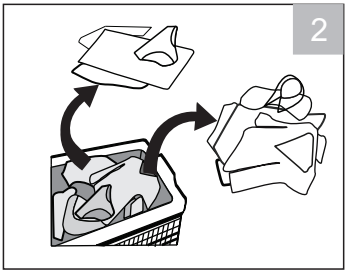

Sort laundry according to color and textile type

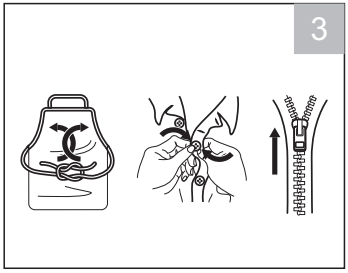

Tie together long textile strips and belts, close zips and button

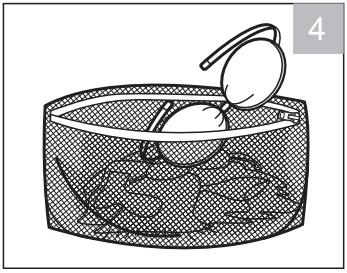

Put small items into a laundry bag

Warning!

- Do not wash articles that have been cleaned in, washed in, soaked in, or dabbed with combustible or explosive substances like wax, oil, paint, gasoline, alcohol, kerosene, and other flammable materials.
- Washing single clothes items may easily create big eccentricity . Therefore it is suggested to add one or two more laundry items to the wash so that spin can be done smoothly.
- Do not wash,spin,or dry water-proof seats,mats,or clothing.

3.3 Detergent Dispenser

I Pre wash

II Main wash

❀ Softener

Release button to pull out the dispenser

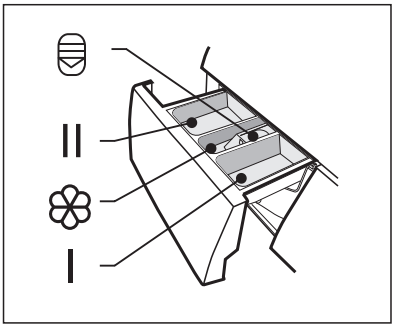

Caution!

- Detergent only need to be added in “compartment I ”after selecting pre-wash function.
- Do not put laundry beads into the detergent dispenser.

Programme	I	II/💧	❀	Programme	I	II/💧	❀
Cotton	○	●	○	Rapid 45’	○	●	○
Mix	○	●	○	ECO 40-60		●	○
Synthetic	○	●	○	Bulky	○	●	○
Jeans	○	●	○	Wool		●	○
20℃		●	○	Rinse & Spin			○
Allergy Care	○	●	○	Spin Only			
Steam Care	○	●	○	Drum Clean			
Quick 15’		●	○				

● Means must ○ Means optional

3.4 Control Panel

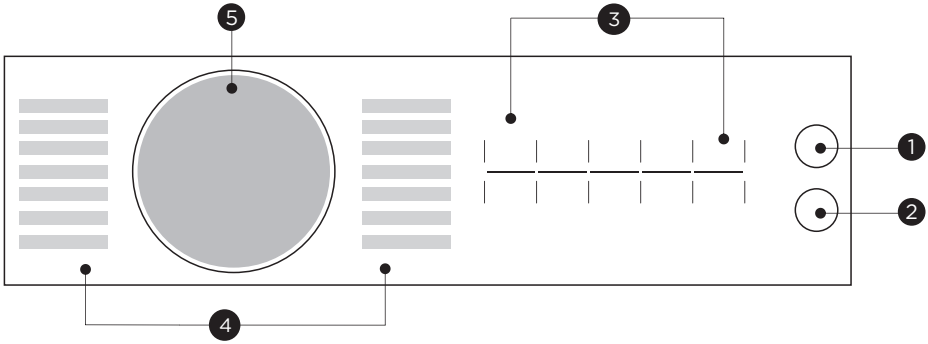

1 On/Off

Turn the appliance on and off.

2 Start/Pause

Start or pause your programme.

3 Option

This allows you to select additional functions and will light when selected.

4 Programmes

Available according to the laundry type.

5 Display

The display shows settings, estimated remaining time, options and status messages.

3.5 Display

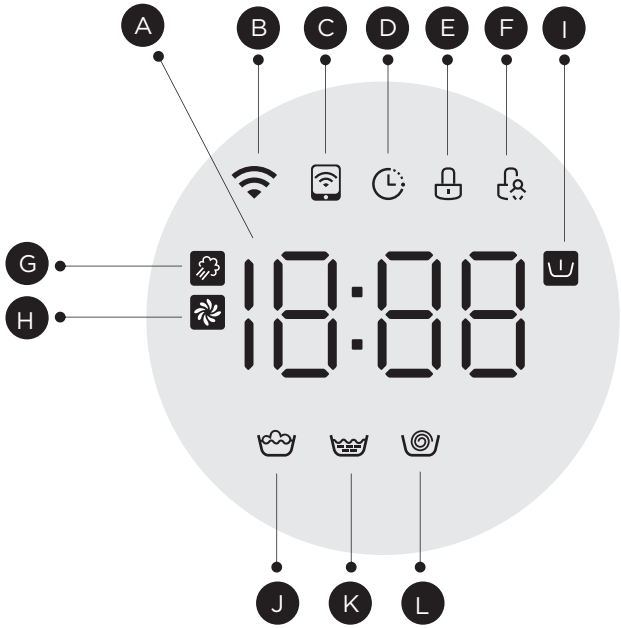

A Display	
Wash Time 125	Delay Time 2H
Speed 400	Error E30
End End	Temp. 30
Water Level AU/L - 1	

B Wireless Network	C Remote Control
D Delay	E Door Lock
F Child Lock	G SteamCare
H AutoClean	I PreWash
J Wash	K Rinse
L Spin	

3.6 Programmes

Programmes are available according to the laundry type.

Programmes	
Cotton	Hard-wearing textiles, heat-resistant textiles made of cotton or linen.
Mix	Mixed load consisting of textiles made of cotton and synthetics.
Synthetic	Wash synthetic articles, for example: shirts, coats, blending. While washing the knitting textiles, detergent quantity shall be reduced due to its loose string construction and easily forming bubbles.
Jeans	Specially for jeans.
20℃	Washing brightly colored clothes, it can protect the colors better.
Allergy Care	This program applies 60℃ high temperature sterilization to make the clothes washing more clean to achieve the anti-allergy effect.
Steam Care	Steam Care is applicable for daily laundries like cotton and synthetics. The steam can deeply penetrate the fiber, which effectively eliminate bacterias and germs, preventing odors and protecting your health.
Quick 15′	Extra short programme approx, suitable for lightly soiled washing as a small amounts of laundry.
Rapid 45′	This programme is suitable for washing not very dirty clothes, save more energy and washing.
ECO 40-60	Default 40℃,not selectable,suitabale for laundry washing at about 40℃-60℃.
Bulky	This program is specially designed for washing duvet coats.
Wool	Hand or machine-washable wool or richwool textiles. Especially gentle wash programme to prevent shrinkage, longer programme pauses (textiles rest in wash liquor).
Rinse&Spin	Extra rinse with spin.
Spin Only	Extra spin with selectable spin speed.

Drum Clean	Specially set in this machine to clean the drum and tube. It applys 90 °C high temperature sterilization to make the clothes washing more green. When this programme is performed, the clothes or other washing cannot be added. When proper amount of chlorine bleaching agent is put in, the barrel cleaning effect will be better. The customer can use this programme regularly according to the need.

Programme	Load(kg)		Display Time	
	10.0	12.0	10.0	12.0
Cotton	10.0	12.0	3:49	3:49
Mix	10.0	12.0	1:30	1:30
Synthetic	5.0	6.0	3:27	3:27
Jeans	10.0	12.0	1:46	1:46
20℃	5.0	6.0	1:01	1:01
Allergy Care	5.0	6.0	2:38	2:38
Steam Care	5.0	6.0	1:57	1:57
Quick 15’	2.0	2.0	0:15	0:15
Rapid 45’	2.0	2.0	0:45	0:45
ECO 40-60	10.0	12.0	0:59	0:59
Bulky	10.0	12.0	1:48	1:48
Wool	2.0	2.0	1:07	1:07
Rinse & Spin	10.0	12.0	0:20	0:20
Spin Only	10.0	12.0	0:12	0:12
Drum Clean	-	-	1:18	1:18

Note!

- The parameters in this table are only for user's reference. The actual parameters maybe different with the parameters in above mentioned table.

3.7 Option

Cycle	Default Temp.(℃)	Default spin speed in rpm	Additional functions
		1400	
Quick 15’	Cold	800	,
Rapid 45’	40	800	, , ,
ECO 40-60	--	1000	,
Bulky	40	1000	, , , ,
Wool	40	600	, ,
Rinse & Spin	--	1000	, ,
Spin Only	--	1000	,
Steam Care	40	800	, , , , ,
Allergy Care	60	800	, , , , ,
20℃	20	600	, ,
Jeans	30	1000	, , , , ,
Synthetic	40	1200	, , , , ,
Mix	40	800	, , , , ,
Cotton	40	1200	, , , , ,
Drum Clean	90	--	,

Note!

- For the maximum spin speed, program time, and other details of the ECO 40-60 program, please refer to the content on the Product Fiche page.
- The table shows which cycle offers which options for adjustment.

3 OPERATION

Temp.

Temp.

When needed, the washing temperature can be adjusted by pressing the temperature button in the following steps: Cold - 20°C - 30°C - 40°C - 60°C - 90°C.

Spin/

Spin

When needed, the spinning speed can be adjusted pressing the Speed button in the following steps:
1400: 0-400-600-800-1000-1200-1400.

Remote Control

The detail of Remote Control , pls check “ SMART FUNCTION ” .

Delay

Delay

1. Select a programme
2.Press the Delay button to choose the delaying time 0-24h
3.Press [Start/Pause] to start the delay operation

Choose programme › Setting time › Start

To cancel the Delay function, press the “Delay” button before starting the program until the display shows 0 h. If the program has already started, switch the appliance off and afterwards on and select a new programme.

Pre Wash /

Pre Wash

Extra washing function before the main washing cycle starts to increase the washing performance.
Note: Detergent needs to be added to the compartment I.

WiFi

Press[Pre Wash /]3 seconds ,the washing machine will be connected to the internet on your smartphone, you can go to the settings and turn on the wireless connection and select an AP (Access Point).

NOTE:The detail of connect wireless network , pls check “ SMART FUNCTION ” .

Extra Rinse

The laundry will undergo an extra rinse after selecting this function.

Turbo

Turbo

The function can decrease the washing time.

3 OPERATION

3s for Reload

Reload

This operation can be executed during the washing progress. When the drum is still rolling and there is large amount of water with high temperature in the drum.
The state is unsafe and the door cannot be opened forcefully. To Press [3s for Reload]3sec. to reload, and start the clothes adding in the midway function. Please follow the steps as bellow:
1.Wait until the drum stops rotation.
2.The door lock is unlocked.
3.Close the door when the clothes are reloaded and press the [Start/Pause] button.

3s for Reload › Clothes › ▷II

Press[3s for Reload]3sec. Reload the clothes Start

AUTO CLEAN

AutoClean

The self-clean function will be automatically activated during every washing cycle. Hygiene Pro system will keep your laundry always clean. Environmentally save time and ease your laundry.

Water Level

Water Level

Press the button to change the water level : AU/L-1/L-2/L-3/L-4

Steam Care

SteamCare is the function added before main wash, which will generate warm steam to sterilization and greater washing performance especially for cold wash.

Caution!

Some programs have automatically added Auto Clean or Steam Care functions, these two functions can't be manually selected or canceled.

3 OPERATION

Child Lock

This function is meant to keep children from misusing the controls.

Press [3s for Child Lock] simultaneously for 3 sec until the buzzer beep. The child lock indicator switches on.

Caution!

When the Child Lock is activated, the display will alternately show “CL” and the remaining time.
Pressing any other button will cause the Child Lock indicator to flash. When the program ends, “CL” and “END” will alternate on the display.

The Child Lock deactivates the function of all buttons except the On/Off button and the Child lock button!
Only the simultaneous pressing of the button [3s for Child Lock] can deactivate the Child Lock!
Please deactivate the Child Lock before selecting a new program!

Mute the buzzer

Start

Press the [Extra Rinse]button for 3sec. to mute the buzzer.

To act the buzzer function, press the button again for 3 seconds. The setting will be kept until the next reset.

4 MAINTENANCE

4.1 Cleaning and Care

Warning!

- Always unplug the appliance and close the water tap before cleaning and maintenance.

Cleaning the Cabinet

Proper maintenance on the washing machine can extend its working life. The surface can be cleaned with diluted non-abrasive neutral detergents when necessary. If there is any water overflow, use a towel to wipe it off immediately.
Never use sharp items to clean the appliance.

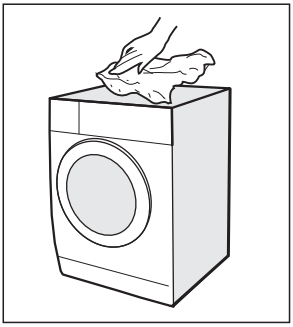

Caution!

- Never use abrasive or caustic agents. formic acids or its diluted solvents or similar substances, like alcohol or chemical products.

Cleaning the Drum

Any rust stains left inside the drum by metal articles must be removed immediately using chlorine-free detergents. Never use steel wool for cleaning the drum!

Note!

- Keep any laundry away from the machine while cleaning the drum.

Cleaning the Door Seal and Glass

Wipe the glass and seal after each wash to remove lint and stains. If lint builds up it can cause leakages.
Remove any coins, buttons and other objects from the seal after each wash.
Clean the Door Seal and Glass every month to ensure the normal operation of the appliance.

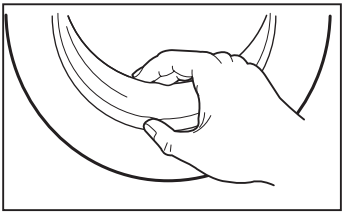

Cleaning the Inlet Filter

Note!

- Diminishing water flow is a sign that the filter need to be cleaned.

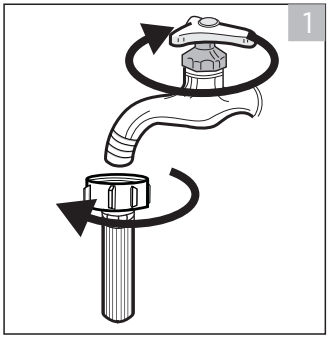

1. Close the tap and remove the water supply hose from it.

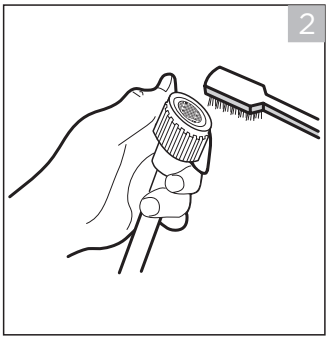

2. Clean the filter with a brush.

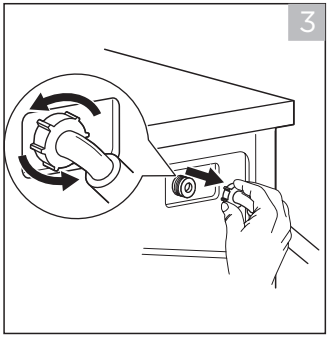

3. Unscrew the water supply hose from the backside of the machine. Pull out the filter with long nose pliers.

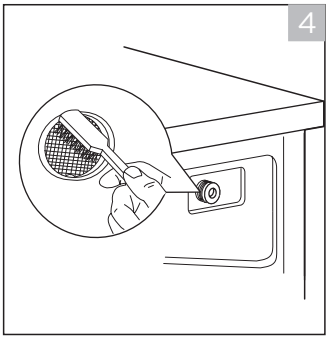

4. Use a brush to clean the filter.

5. Reinstall the filter to the water inlet and reconnect the water supply hose.
6. Clean the Inlet filter every 3 months to ensure the normal operation of the appliance.

4 MAINTENANCE

Cleaning the Detergent Dispenser

1. Press down the release [ ] on the softener cover and pull the dispenser drawer out of the recess. Clean the inside of the recess with a brush.
2. Lift the softener cover off the dispenser drawer and wash both items with water.
3. Restore the softener cover and push the drawer back into the recess.

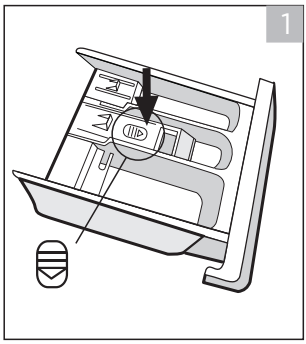

Press the release and remove the dispenser drawer

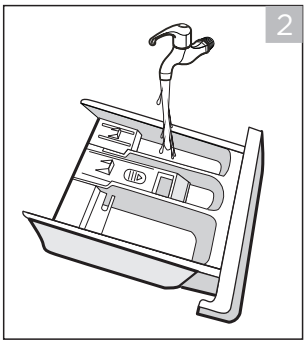

Clean the dispenser drawer and the softener cover under water

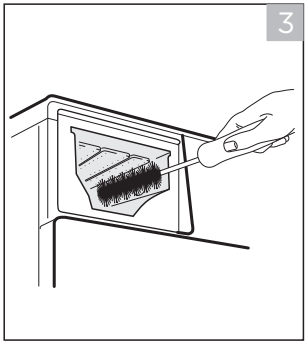

Clean the recess with an soft brush

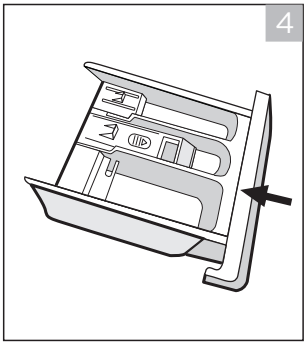

Insert the dispenser drawer

Note!

- Do not use abrasive or caustic agents to clean plastic parts.
- Clean the detergent dispenser every 3 months to ensure the normal operation of the appliance

4 MAINTENANCE

Cleaning the Drain Pump Filter

Warning!

- Make sure that the machine has finished the washing cycle and is empty. Switch it off and unplug it before cleaning the drain pump filter.
- Be careful of hot water. Wait for water cooling down. Risk of scalding!
- Clean the filter periodically every 3 months to ensure the normal operation of the appliance.

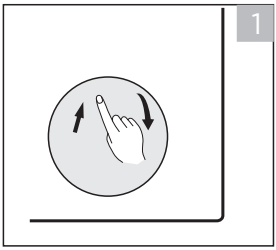

Open the lower cover cap

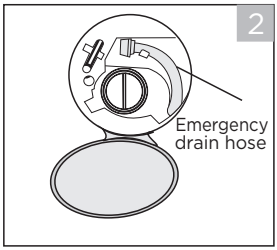

Pull out the emergency drain hose, and take off the hose cap

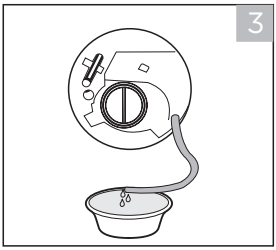

After water runs out, reset the drain hose

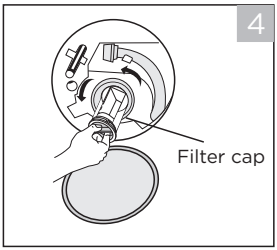

Open the filter by turning to the counter clockwise

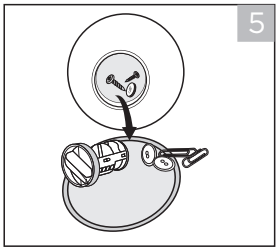

Remove extraneous matter

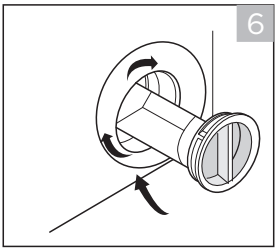

Carefully reinsert the filter and screw the lower cover cap in clockwise

Caution!

- Make sure emergency drain hose cap and the emergency drain hose are reinstalled properly, otherwise water may leak.
- Some machine don't have emergency drain hose, so step 2 and step 3 can be skipped. Rotate lower cover cap directly to make water run into basin.

Emergency Door Release

In case of power failure or other circumstances and door cannot be opened. If it is necessary to open the door under this circumstances, please pull down the pull cord inside emergency door and restore the pull cord after opening the door.

Emergency door pull cord

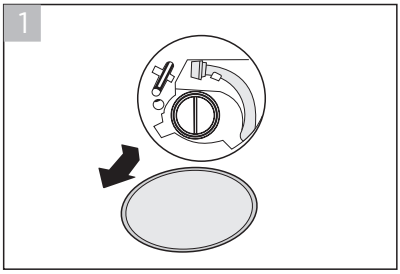

1.Open filter door.

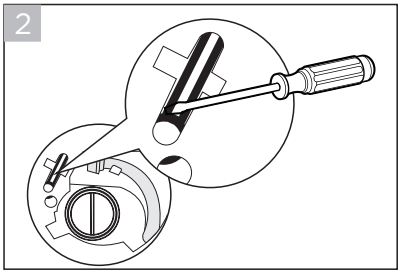

2.Using a straight screwdriver (or other non-sharp tool), insert into the emergency door pull cord.

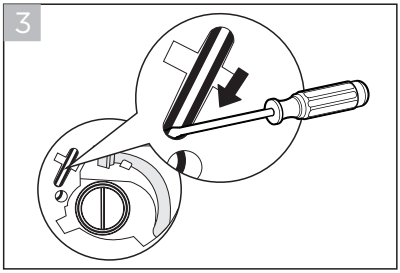

3.Pull down the emergency door pull cord (refer to direction of the arrow in the picture).
If unlocked successfully, you will find the door lock icon will go out.

Warning!

The machine is not allowed to use the emergency switch pull cord during washing. If need to run machine urgently, it is recommended to open door after water is cooled, to avoid getting burn caused by high temperature residual water outflow from the machine tub.

4.2 Trouble Shooting

Whenever there is a problem with the appliance, check if you can solve it following the tables below. If the problem persists, please contact the customer service.

Description	Possible cause	Solution
Appliance does not start	Door is not closed properly.Clothes are stuck.	Close the door properly andrestart. Check the laundry.
Door can´t be opened	Safety protection is activated.	Disconnect the power and restart.
Water leakage	Connections are not tight enough.	Check and fasten the water inlet pipe.Check and clean the outlet hose.
Detergent residues in the detergent dispenser	Detergent is damp and/or clotted.	Clean and wipe the detergent dispenser dry.
Indicator or display does not work	PC board or harness have connection problems.	Switch off the power and check if the mains plug is connected properly.
Abnormal noise	Fixing bolts still in place. Floor is not solid or level.	Check if the fixing bolts have been removed. Make sure the appliance is installed on a solid and level floor.

Error Codes

Description	Possible cause	Solution
E30	Door is not closed properly.	Close the door properly and restart.
E10	Water injecting problem during wash cycle.	Check if the water pressure is high enough. Straighten the water pipe. Clean the inlet valve filter.
E21	Overtime water draining	Check the drain hose for blockage.
E12	Water overflow	Restart the appliance.
EXX	Others	Restart the appliance. If problem persists, please contact the customer service.

4.3 Customer service

Spare part for your appliance are available for a minimum of 10 years.
In case of questions, please contact our local customer service center.

Warning!

Risk of electric shock

- Never try repair an appliance which is defective of presumed to defective. You may put your own and future users' lives in danger. Only authorised specialists are allowed to carry out this repair work.
- Improper repair will void the warranty and subsequent damages can't be recognized!

Transport

IMPORTANT STEPS WHEN MOVING THE APPLIANCE

- Unplug the appliance and close the water inlet tap.
- Check, if the door and the detergent dispenser are closed properly.
- Remove the water inlet pipe and the outlet hose from the house installations.
- Let the water drain completely from the appliance (see "Maintenance Cleaning the drain pump filter")
- Important: Re-install the 4 transport bolts in the back of the appliance.
- This appliance is heavy. Transport with care. Never hold any protruding part of the machine when lifting. The machine door can not be used as a handle.

5 TECHNICAL SPECIFICATION

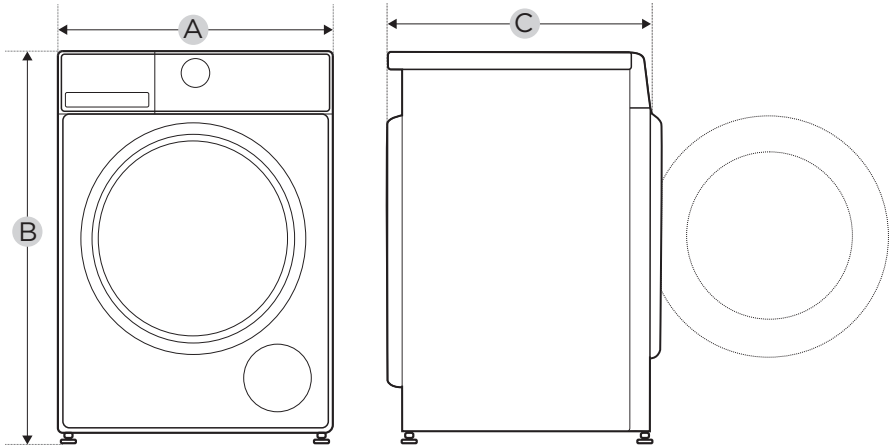

Model	MF200W100WB Series	MF200W120WB Series
Power Supply	220-240V~,50Hz	
MAX.Current	10A	
Standard Water Pressure	0.05MPa~1MPa	
Washing Capacity	10.0kg	12.0kg
Dimension		
A	595mm	595mm
B	850mm	850mm
C	535mm	595mm
Weight	65kg	72kg
Rated Power	2000W	2000W

6 SMART FUNCTION

Use Your Appliance with the MSmartHome App

Before you start, make sure that:

1. Your smartphone is connected to home wireless network network,and you know the network password.
2. Make sure you are near the home appliance.
3. The 2.4GHz band wireless signal is enabled on your wireless router.

Follow the below steps to enter the remote control state

Download the MSmartHome app

On an app market (Google Play Store, Apple App Store), search for "MSmartHome" and find the MSmartHome app. Download and install it on your phone. You can also download the app by scanning the QR code below.

Register and log in

Open the MSmartHome app, and create a new account to start (you can also register through a third-party account). If you already had an existing account, use the account to log in.

Connect your devices to MSmartHome

1: Please make sure your mobile phone is connected to wireless network. If not, go to settings and turn on the wireless connection, select and connect to a wireless network. Also please turn on the Bluetooth on your phone. If not, go to settings and turn it on.

2:Please power on your devices.

3:Open MSmartHome app on your phone.

4:If a message of "Smart devices discovered nearby" appears, click to add.

5:If no message appears, select "+" on the page and select your device in the list of nearby devices available. If your device is not listed, please add your device manually by the device category and device model.

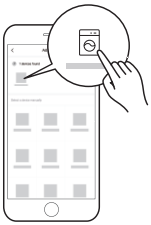

6:Connect your device to wireless network according to the instructions on app, if the connection fails, please follow the instructions provided by the app to continue with the operation.

7. Start the remote control
   Rotate the knob randomly to indicate one of the programs, and press [ ] continuously until the remote control icon light up in the knob display, which means it has entered the remote control state and you can start to control remotely.

Wireless Network Status Light

	Slowly flashing	Waiting for connection
	Quickly flashing	Connecting
	Quickly flashing solid	Connected to your wireless router

Notes

- Make sure your devices are powered on.
- Keep your mobile phone close enough to your device when you are connecting network to your device.
- Connect your mobile phone to the wireless network at home, and make sure you know the password of the wireless network.
- Check if your router supports 2.4 GHz wireless network band and turn it on. If you are not sure whether the router supports 2.4 GHz band, please contact the router manufacturer.
- The device cannot connect to the wireless network that requires authentication, and it usually appears in public area such as hotels, restaurants, etc. Please connect to a wireless network that does not require authentication.
- It is recommended to use a wireless network name that only contains letters and numbers. If your wireless network name contains special characters, please modify it in the router.
- Turn off the WLAN+ (Android) or WLAN Assistant (iOS) function of your mobile phone when connecting network to your devices.
- In the case that your device connected to wireless network before but it needs to reconnect, please click "+" on app Home page, and add your device again by the device category and model according to the instructions on app.

Methods to turn on the wireless network function
1. Press [PreWash] 3 seconds to turn on the wireless network function, it can also configure the network or reset the network.
2. Press [Spin/] to turn on the wireless network function and control remotely. If you are not configuring the network for the first time, or you don't want to reset the settings, it's recommended to use the second method.

Methods to turn off the wireless network function
1. Press [Temp.] 3 seconds to turn off the wireless network function.
2. Unplug the appliance to power off.

Midea

make yourself at home

V1.0

16138100A35884